S-3FPARTS INNOVATIONS LLP
Company No: ACI-7026
GST NO: 24AFJFS3134B1ZE

Email: 3fparts@gmail.com
Phone: 7435071980
Our Address: No-19(A) Shrine Estate, Kewal Kanta Road, Opp. Nanavati Estates, Rakhial Ahmedabad, Gujarat 380023 India

Technical Data Sheet

M4 x 25mm CSK Torx Countersunk Screws (ISO 14581) - Stainless Steel – 304

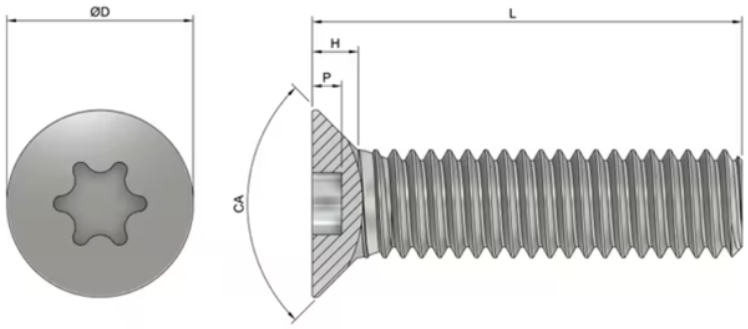

3FParts Product Code (3PC)	3F-00125-627-2452
Head Diameter (D)	8.4 mm - Tolerance: +0/-0.36 mm
Torx Size	T20
Countersunk Angle (CA)	90 Degrees - Tolerance: +2/-0 Degrees
Countersunk Length (H)	2.7 mm
Drive Depth (Maximum) (P)	1.5 mm
Drive Depth (Minimum) (P)	1.14 mm
Thread Size (Dia.)	M4
Thread Pitch	0.70 mm
Length (L)	25mm
Manufacturing Standard	ISO 14581
Material	Stainless Steel – 304
Fully Threaded	Yes