S-3FPARTS INNOVATIONS LLP
Company No: ACI-7026
GST NO: 24AFJFS3134B1ZE

Email: 3fparts@gmail.com
Phone: 7435071980
Our Address: No-19(A) Shrine Estate, Kewal Kanta Road, Opp. Nanavati Estates, Rakhial Ahmedabad, Gujarat 380023 India

Technical Data Sheet

M5 x 25mm CSK Torx Countersunk Screws (ISO 14581) - Stainless Steel – 304

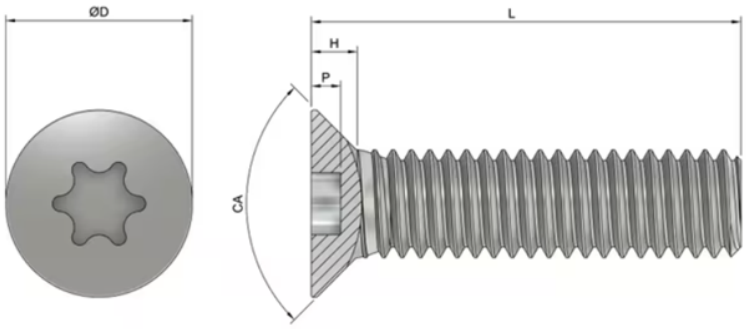

3FParts Product Code (3PC)	3F-00125-743-2451
Head Diameter (D)	9.2 mm - Tolerance: +0/-0.36 mm
Torx Size	T25
Countersunk Angle (CA)	90 Degrees - Tolerance: +2/-0 Degrees
Countersunk Length (H)	2.5 mm
Thread Size (Dia.)	M5
Thread Pitch	0.80 mm
Length (L)	25mm
Manufacturing Standard	ISO 14581
Material	Stainless Steel – 304
Fully Threaded	Yes