S-3FPARTS INNOVATIONS LLP
Company No: ACI-7026
GST NO: 24AFJFS3134B1ZE

Email: 3fparts@gmail.com
Phone: 7435071980
Our Address: No-19(A) Shrine Estate, Kewal Kanta Road, Opp. Nanavati Estates, Rakhial Ahmedabad, Gujarat 380023 India

Technical Data Sheet

M3 x 8mm Male to Female Hex Spacer (Standoff) - Brass - Nickel Plated

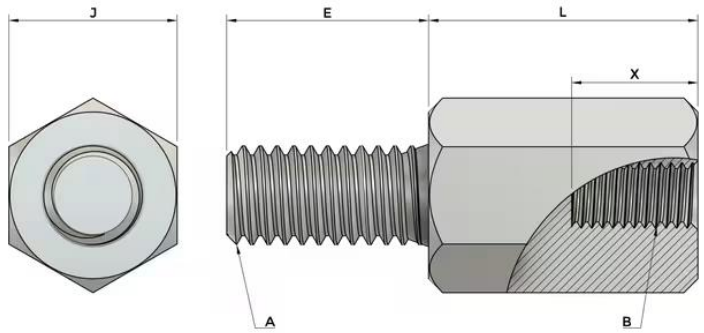

3FParts Product Code (3PC)	3F-00125-187-2360
Male Thread Size (A)	M3
Female Thread Size (B)	M3
Female Thread Length (X)	6mm
Hexagon A/F (J)	5mm
Male Thread Length (E)	6mm
Thread Size (Dia.)	M3
Thread Pitch	0.50 mm
Length (L)	8mm
Material	Brass - Nickel Plated
Manufacturing Standard	3F3321