S-3FPARTS INNOVATIONS LLP
Company No: ACI-7026
GST NO: 24AFJFS3134B1ZE

Email: 3fparts@gmail.com
Phone: 7435071980
Our Address: No-19(A) Shrine Estate, Kewal Kanta Road, Opp. Nanavati Estates, Rakhial Ahmedabad, Gujarat 380023 India

Technical Data Sheet

M30 Hex Nut (DIN 934) - Stainless Steel 304 (A2-70)

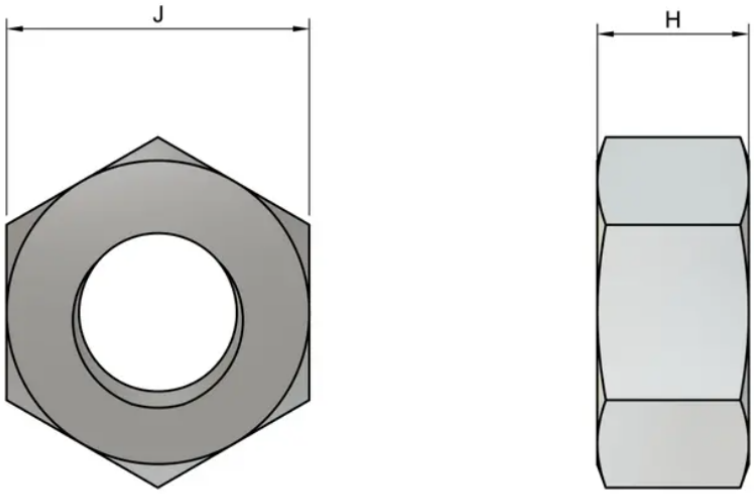

3FParts Product Code (3PC)	3F-00125-040-1745
Socket Size (J)	46mm, Tolerance: +0/-1mm
Nut Thickness (H)	24mm, Tolerance: +0/-1.3mm
Material	Stainless Steel 304 (A2-70)
Manufacturing Standard	DIN 934
Thread Size (Dia.)	M30