**S-3FPARTS INNOVATIONS LLP**
**Company No:** ACI-7026
**GST NO:** 24AFJFS3134B1ZE

**Email:** 3fparts@gmail.com
**Phone:** 7435071980
**Our Address:** No-19(A) Shrine Estate, Kewal Kanta Road, Opp. Nanavati Estates, Rakhial Ahmedabad, Gujarat 380023 India

# Technical Data Sheet

## M22 (22mm) Hex Nut (DIN 934) - Stainless Steel 304 (A2-70)

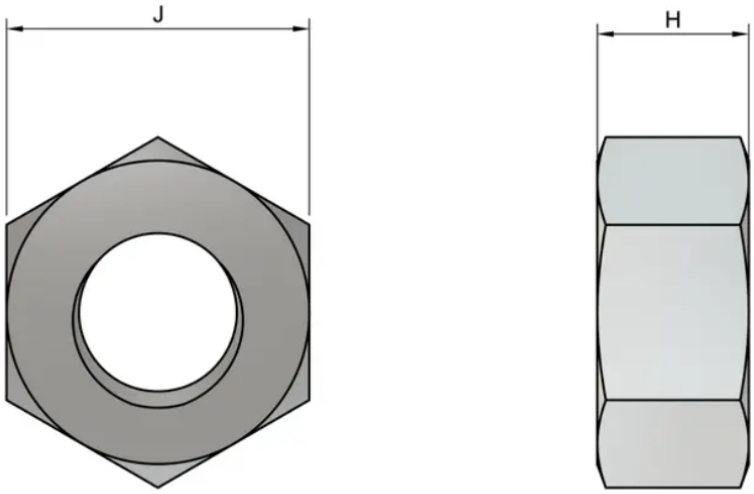


| | |
|---|---|
| 3FParts Product Code (3PC) | 3F-00125-317-1739 |
| Socket Size (J) | 34mm, Tolerance: +0/-1mm |
| Nut Thickness (H) | 19.4mm, Tolerance: +0/-1.1mm |
| Material | Stainless Steel 304 (A2-70) |
| Manufacturing Standard | DIN 934 |
| Thread Size (Dia.) | M22 |
| Thread Pitch | 2.50 mm |