S-3FPARTS INNOVATIONS LLP
Company No: ACI-7026
GST NO: 24AFJFS3134B1ZE

Email: 3fparts@gmail.com
Phone: 7435071980
Our Address: No-19(A) Shrine Estate, Kewal Kanta Road, Opp. Nanavati Estates, Rakhial Ahmedabad, Gujarat 380023 India

Technical Data Sheet

M1.6 x 4mm CSK Phillips Countersunk Machine Screws (DIN 965) - Stainless Steel 304 (A2-70)

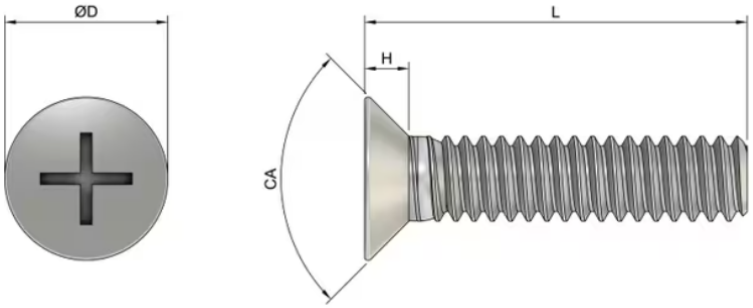

3FParts Product Code (3PC)	3F-00125-406-1703
Countersunk Angle (CA)	90 Degrees, Tolerance: +2/-0 Degrees
Countersunk Length (H)	0.96mm
Head Diameter (Max) (D)	3mm
Drive Size	PH0
Manufacturing Standard	DIN 965
Material	Stainless Steel 304 (A2-70)
Thread Size (Dia.)	M1.6
Length (L)	4mm
Fully Threaded	Yes
Thread Pitch	0.35 mm