**S-3FPARTS INNOVATIONS LLP**
**Company No:** ACI-7026
**GST NO:** 24AFJFS3134B1ZE

**Email:** 3fparts@gmail.com
**Phone:** 7435071980
**Our Address:** No-19(A) Shrine Estate, Kewal Kanta Road, Opp. Nanavati Estates, Rakhial Ahmedabad, Gujarat 380023 India

# Technical Data Sheet

## M1.6 x 3mm CSK Phillips Countersunk Machine Screws (DIN 965) - Stainless Steel 304 (A2-70)

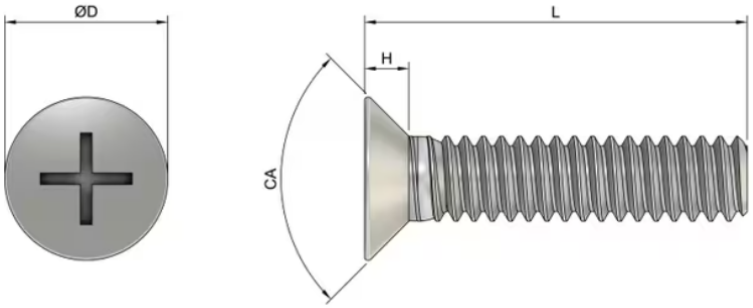


| | |
|---|---|
| 3FParts Product Code (3PC) | 3F-00125-406-1696 |
| Countersunk Angle (CA) | 90 Degrees, Tolerance: +2/-0 Degrees |
| Countersunk Length (H) | 0.96mm |
| Head Diameter (Max) (D) | 3mm |
| Drive Size | PH0 |
| Manufacturing Standard | DIN 965 |
| Material | Stainless Steel 304 (A2-70) |
| Thread Size (Dia.) | M1.6 |
| Length (L) | 3mm |
| Fully Threaded | Yes |
| Thread Pitch | 0.35 mm |