S-3FPARTS INNOVATIONS LLP
Company No: ACI-7026
GST NO: 24AFJFS3134B1ZE

Email: 3fparts@gmail.com
Phone: 7435071980
Our Address: No-19(A) Shrine Estate, Kewal Kanta Road, Opp. Nanavati Estates, Rakhial Ahmedabad, Gujarat 380023 India

Technical Data Sheet

M1.6 (1.6mm) Hex Nut (DIN 934) - Stainless Steel 304 (A2-70)

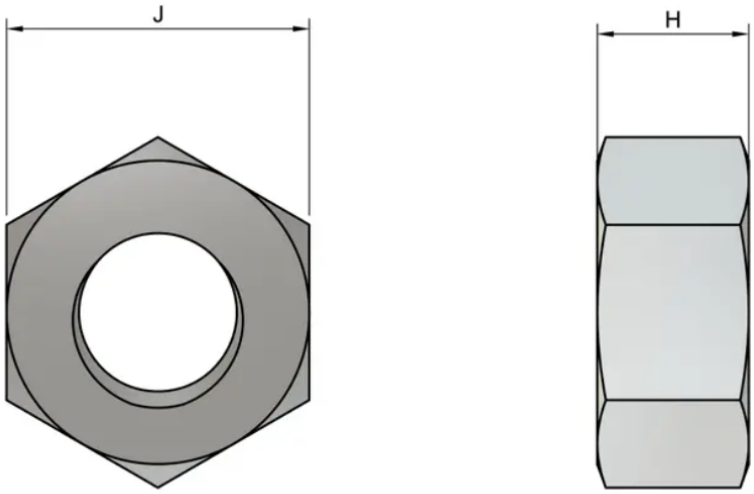

3FParts Product Code (3PC)	3F-00125-119-1639
Thread Pitch	0.35mm
Socket Size (J)	3.2mm, Tolerance: +0/-0.18mm
Nut Thickness (H)	1.3mm, Tolerance: +0/-0.25mm
Material	Stainless Steel 304 (A2-70)
Manufacturing Standard	DIN 934
Thread Size (Dia.)	M1.6
Thread Pitch	0.35 mm